ASSEMBLED IN VIETNAM **PENTAX** TV LENS 6 mm 1:1.2

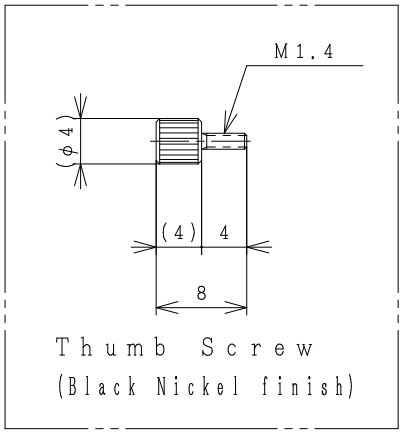

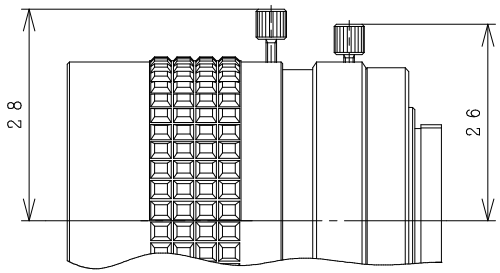

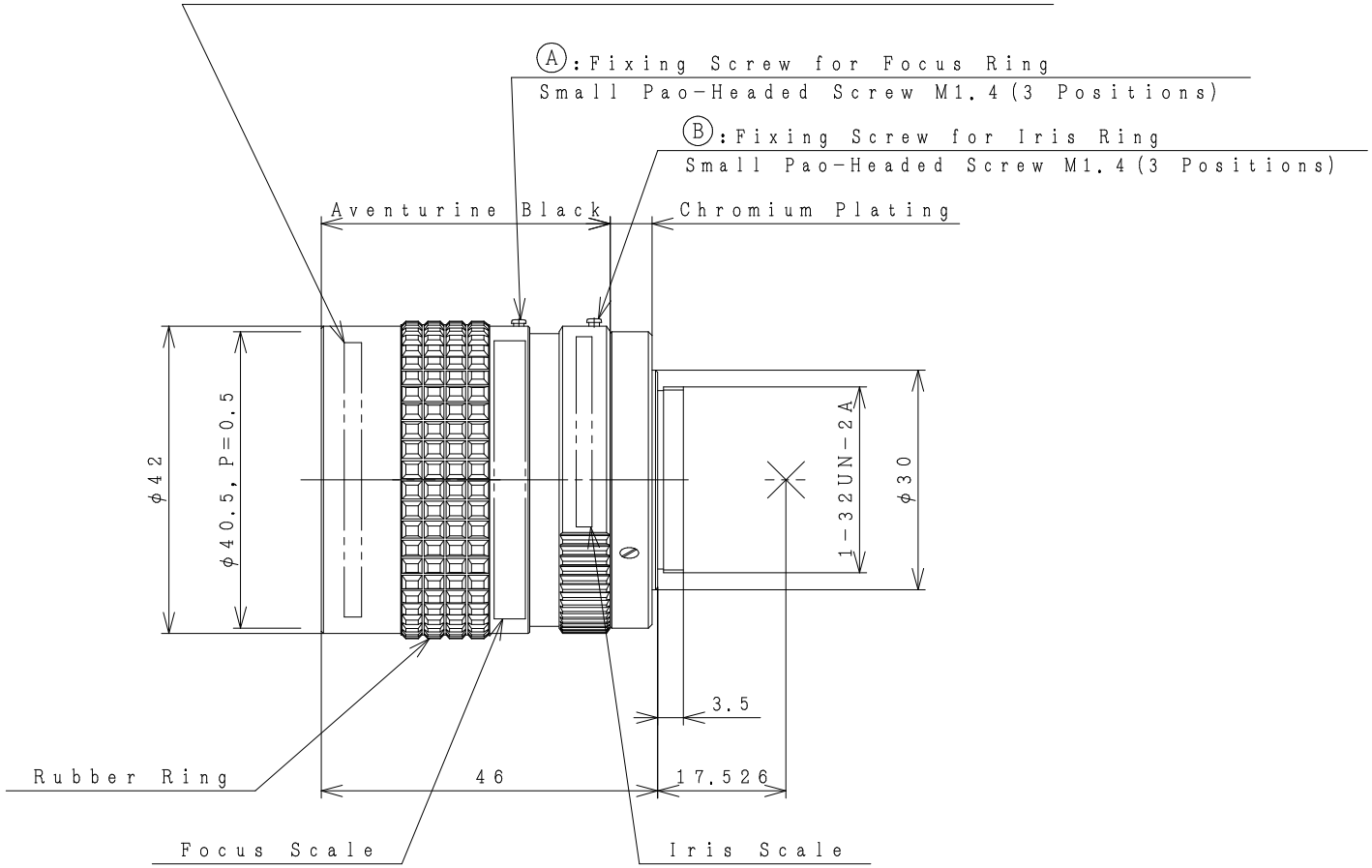

Focus Scale	8″		1	1.5		∞		ft	
	0.2		0.3	0.5				m	
Iris Scale	C	16	11	8	5.6	4	2.8	2	1.2

SPEC. INFO	3160634-S001-C-B33 JUL. 25, '07
PENTAX Corporation Security System Division	